ElecCircuit

:: Home » Digitals & MCU » **CD4026 Pinout and Counter Circuit Example with 7-Segment Display**

CD4026 Pinout and Counter Circuit Example with 7-Segment Display

Last Updated on: September 28, 2025 by Apichet Garaipoom

When making a counter circuit with a 7-segment display, one of the first integrated circuits that comes to mind is the CD4026. Even though this IC is ancient, as I have been using it for more than 30 years, it still holds out very well with its ability to both count and drive a 7-segment display.

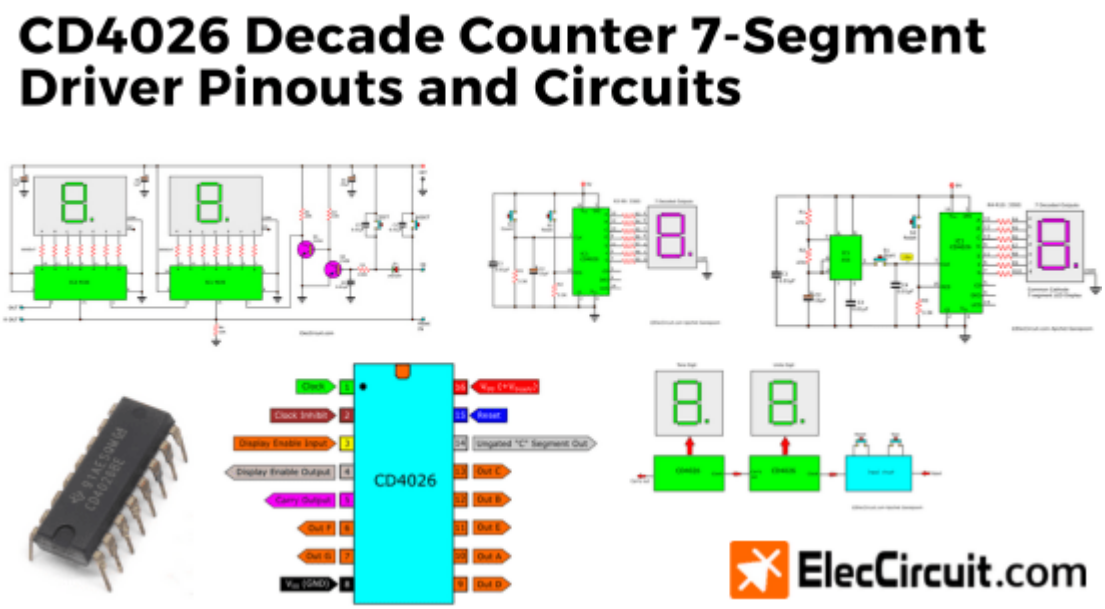

The CD4026 is pretty simple to use, has low power consumption, and is stable, plus it is compatible with TTL IC, which is why it is suitable for basic digital circuits. By itself, it can count and display one digit (0-9). However, two of them can be cascaded together to count more digits using the carry-out pin.

Table of Contents

1. CD4026 Decade Counter / Divider CMOS IC
    1.1. Features

1.2. Pinout
1.3. Specifications
2. Equivalents for CD4026
3. CD4026 Datasheets
4. Example Circuits
4.1. CD4026 Basic Single Digit Counter Circuit
4.2. Automatic 0-9 Counter Circuit using CD4026 and NE555
4.3. Two Digit Counter Circuit using CD4026
5. Conclusion
5.0.1. Learn Electronics with Our Family

CD4026 Decade Counter / Divider CMOS IC

The CD4026 is a counter CMOS chip that counts up to 9 using a five-bit Johnson or Libaw-Craig code. It also has an integrated decoder to drive a 7-segment display in numerical order (0-9).

Furthermore, multiple CD4026s could be cascaded together to get more than one digit on the 7-segment displays. Because it is both a counter and a 7-segment display driver, it is often used in compact or low-component devices.

Features

Here are a few of the many interesting and valuable features of CD4026:

- It contains both a counter and a 7-segment decoder/driver.
- It can effortlessly interface with many types of 7-segment displays.
- Ideal for driving low-power 7-segment displays directly
- Maximum supply voltage 15v
- Max current per output 15mA
- Maximum speed of operation 5MHz
- It can interface with timers, microcontrollers, or TTL.
- It can be cascaded together to display more digits.
- Tested for quiescent current at 20V
- It has 16 pins and is available in PDIP, GDIP, and PDSO packages.
- Schmitt-triggered inputs.

Pinout

Next, we have the position of its legs or pinouts. What does each pin do? Otherwise, you may apply the wrong voltage and damage it. Or why doesn't it work? Because we misconnected its pins.

The CD4026 pinout or Terminal Diagrams on top view

CD4026 Decade Counter /Divider CMOS Pinouts

Pins	Initials	Names	Descriptions
1	CLK	Clock Input	Count up by 1 when the “high” clock pulse is applied.
2	CI	Clock Inhibit	Connects to the ground or “low” to enable clock input; disable clock input when connected to “high.”
3	DEI	Display Enable Input	Enable output to the 7-segment display when connected to “high.”
4	DEO	Display Enable Output	Always output a “high”; it enables other IC’s 7-segment display when cascaded.
5	CO	Carry Output	When the IC counts up to nine, it outputs a “high” clock pulse to ICs in a cascade that counts higher digits; also, a divide-by-10 output.
6	F	Out F	Decoded output for connection with a 7-segment display.
7	G	Out G	Decoded output for connection with a 7-segment display.
8	VSS	**Ground Supply**	Connects to the ground or “**low**” of the circuit.
9	D	Out D	Decoded output for connection with a 7-segment display.
10	A	Out A	Decoded output for connection with a 7-segment display.

Pins	Initials	Names	Descriptions
11	E	Out E	Decoded output for connection with a 7-segment display.
12	B	Out B	Decoded output for connection with a 7-segment display.
13	C	Out C	Decoded output for connection with a 7-segment display.
14	UCS	Ungated “C” Segment	Outputs “low” when the count reaches 2; otherwise, stays “high.” It is used when performing division functions.
15	RES	Reset	Reset the count to zero upon receiving a “high” clock pulse.
16	VDD	**Voltage Supply**	Connects to the voltage supply or “**high**” of the circuit.

Specifications

- DC Voltage Supply (VDD) Range: -0.5V to +20V
- Input Current: ±10mA
- Max current per output 15mA
- Power Dissipation: 500mW at -55°C to +100°C
- Operating Temperature Range: -55°C to +125°C
- Maximum Clock Frequency: 6Mhz
- Symmetrical Output Characteristics

Applications

- Decade counting and driving 7-segment decimal display.
- Frequency division.
- Counting up to very high digit when cascading.

- Clocks, watches, timers.
- 7-segment display driver in meter applications.

Equivalents for CD4026

If you cannot find the equivalents for this IC, then try using the ones that have similar functions as listed below.

- CD4033
- CD4511
- MC14511

CD4026 Datasheets

The CD4026 is not a complicated chip; in fact, it is very simple to use. However, if you need the specific details surrounding this chip, check out the manufacturer's datasheet below.

- CD4026B by Texas Instruments

Example Circuits

CD4026 Basic Single Digit Counter Circuit

First, let's look at this basic single-digit counter circuit using the CD4026 to learn the basics of using the CD4026. It counts up by one when pressing the S1; upon reaching nine, it will loop back to zero. Additionally, it resets the count to zero when the S2 is pressed.

CD4026 Basic Single Digit Counter Circuit

How it Works

First, we need to supply the power to the circuit and the chip. The positive supply goes to pin 16, and the ground goes to pin 8. Technically, the supply voltage can be from 3V to 8V; however, we recommend using from 5V to 12V. In this case, we are using a 9V battery.

Secondly, we connect the outputs A, B, C, D, E, F, and G of IC1 to the corresponding inputs of the common cathode 7-segment LED display. Additionally, we should add current-limiting resistors (R3 to R9) because when each of the outputs is “high,” the voltage goes up to almost 9V. Even if the current is very low, it still is not ideal for both the IC1 and LEDs.

Thirdly, we connect pin 15 to the “low” of the circuit, or in other words, the ground. When we press S2, the current will flow through it down to R2, causing pin 15 to be “high,” triggering the reset function of the CD4026.

Next, we connect pin 2—which is the Clock Inhibit (CI)—to the ground to enable clock input into IC1. Likewise, we connect pin 3—Display Enable Input (DEI)—to the “high” of the circuit to enable the output A-G for the 7-segment display.

Lastly, we have to input a “high” clock signal to pin 1 for IC1 to start counting. To achieve that, we are using S1, R1, and C1. When we press the switch S1, the current flows, causing the state of pin 1 to be “high,” whereas R1 and C1 are there to provide a basic debounce for the switch, i.e., preventing double-input when only pressing once.

Whereas other output pins—5, 4, and 14—are left unused, these pins will become important later when cascading multiple CD4026s together.

Automatic 0-9 Counter Circuit using CD4026 and NE555

We also try replacing the switch with an NE555 astable multivibrator oscillator to generate a clock pulse for the CD4026. The NE555 generates a clock at the frequency of 1Hz, or one clock per second, meaning that the circuit above automatically counts from 0 to 9 and then back to 0 again at one-second intervals.

Automatic 0-9 Counter Circuit using CD4026 and NE555

Additionally, we can change the resistance of R1 and R2 to increase or decrease the frequency of the oscillator. For instance, to get 3.3Hz, or about three seconds, we can just replace both R1 and R2 with a 15K resistor.

Side note, this circuit can easily be modified into an electronic 0-9 die machine, or random number generator, by changing the resistance of R1 and R2 for a higher frequency.

Two Digit Counter Circuit using CD4026

This is a digital counter circuit using the CD4026 with dual 7-segment displays. It is a two-digit counter that counts to 99 on the 7-segment displays. Furthermore, this circuit also has a reset function, and it can be used for many different scenarios, for instance, counting items, counting people, and more.

Block Diagram

How it Works

As mentioned earlier, the CD4026 can drive a 7-segment display directly. In this usage, there are two CD4026s cascaded together, where IC1 counts and displays the ones digit and IC2 counts and displays the tens digit; both ICs work on the rising-edge clock.

The input clock is connected to pin 1 of IC1, and then we connect pin 5—which is the Carry Output (CO)—of IC1 to pin 1 of IC2. This means that IC2 will receive a clock when the IC1 count passes nine. We connect pin 15—Reset (RES)—of both ICs together so that we can reset both ICs to zero simultaneously.

Since the counter circuit is pretty sensitive and is prone to double-counting errors, we would need to add a transistor circuit to function as a sort of buffer. The transistor circuit allows a “high” clock into IC1 whenever the input voltage is 2V or higher.

Initially, the input voltage flows into the circuit via D1 and R1 to B of Q2, biasing Q2. Then, Q2 conducts the current from R2 to ground, leaving no bias current for Q1. As a result, Q1 stops conducting current, and the “high” clock flows through R3 to IC1’s pin 1.

After IC1 receives the first clock pulse, it will count up to “1” and display it on the 7-segment display. As more clock pulses come into the circuit, IC1 counts up by one for each individual clock. Upon IC1 receiving the tenth pulse, it will loop back to 0 on the display and send a single clock pulse from pin 5.

This single clock pulse from IC1 is sent directly to pin 1 of IC2, causing it to count up by one. At this point, the display shows the number “10,” representing the tenth clock pulse the circuit receives. When another clock pulse comes into the circuit, the IC1 counts up to one, and the display now shows “11.”

This process repeats again when the total number of clock pulses approaches 20. At the twentieth pulse, IC1 loops back to “0,” and IC2 counts up to “2.” The number displayed on the 7-segment display is the total number of clock pulses the circuit received, “20.”

Eventually, at the hundredth pulse, both ICs loop back to “0,” and the IC2 sends a single clock pulse through pin 5 for the hypothetical next IC that counts the hundredth digit. Therefore, to expand the amount of digits this circuit counts, we simply need to cascade more CD4026s.

Want more brilliant ideas? Here’s how to get them through electronic circuits.

Building this Circuit

Here are the PCB and component layout of this circuit.

Testing and Application

After finishing building the circuit, apply the 6-12V power supply to the circuit using either batteries or a power adapter.

The 7-segment display should display “00.” If it does not, then press the reset switch to reset it. Now try pressing the test switch multiple times; the number on the display should correspond to the number of presses. Lastly, press the reset switch to return to the beginning. Now that this circuit is fully operational, we can connect its input to a door sensor, IR sensor, clock generator, or a simple switch.

> *This IC is part of the CD4000 series, which includes many other chips. I hope you’ll explore more of them.*

Conclusion

The CD4026 is an excellent choice for a simple single-digit counter and a 7-segment display driver in a single chip. In addition, we could cascade multiple CD4026s together to count higher digits with ease. However, for more advanced counters, such as those that count more than three digits or reversible counters for timers, we would need to look for different chips.

Check out these related articles, too:

- **Random counter circuit with 7 segment display**
- **IC 4017/CD4017 Datasheet | Pinout | 15 example**
- **Digital counter circuit using CD4510 & CD4543**

📘 Get Ebook: Simple Electronics Vol.4

Written by: Apichet Garaipoom

Like many others, I started electronics with curiosity and simple circuits. Over time, I've found joy in sharing what I've learned—and now, I get to build with my kids. It's a journey, and I hope this site helps you enjoy yours.

Read more about me

Learn Electronics with Our Family

We are a homeschooling family. Together, we explore electronics and share what we learn. You'll get helpful articles by email — with simple circuits, clear steps, and easy explanations.

No spam. Just helpful updates.

Email

Subscribe

Digitals & MCU

Simple CD40106 Circuits with Pinout and Schmitt Trigger Guide

Learn to use LM311 High-speed Differential Comparator & Pinouts

14 thoughts on “CD4026 Pinout and Counter Circuit Example with 7-Segment Display”

mahmudi

April 19, 2014 at 3:17 pm

how so that the circuit can be used up and down counter (for score board).

Reply

Oscar Manuel

April 20, 2014 at 11:06 am

Hola señores que tenga un feliz día
Me gusta la pagina muchos los proyectos me gustaría los proyectos con pics microcontraladores de la micro chip.
Gracias Oscar.

Reply

Ryan

May 6, 2015 at 6:56 pm

Hi, can you movie the counter up or down? Like increase the number and go back if you want to decrease the number?

Reply

Chi

October 12, 2016 at 9:11 pm

I can’t find IC CD4026 . Is there any possible IC I can use? Instead of CD 4026.

Reply

Andreas

June 3, 2017 at 6:31 am

Hi friend
Can you tell me what type of segment can i use? Common cathode or Anode?
The BZ 505 type work with circuit?

Thanks

Andreas

Reply

gio

October 12, 2017 at 7:28 am

i have a 10 pin dual 7 segment display can i use this circuit with this kind of display or do i need an 18 pin dual 7 segment display

Reply

proxy server list

September 9, 2018 at 2:17 pm

Hi,I check your new stuff named “2 Digit Simple digital counter circuit using CD4026” regularly.Your story-telling style is witty, keep doing what you’re doing! And you can look our website about proxy server list.

Reply

Marvin Dela Cruz

May 13, 2019 at 6:48 pm

Hello ca we change the switch as a photodiode? Thank you

Reply

ElecCircuit.com

May 28, 2019 at 8:49 pm

Hi,
Yes, You can test it. You may change some components like R1.

Have a good day. Fun with Digital learning.

Reply

laxmikant patel

December 10, 2020 at 7:31 am

4026 Last counting on power off this counter circuit becomes zero.

Reply

Apichet Garaipoom

December 11, 2020 at 6:14 pm

Hello laxmikant patel,
Thanks for your visit. I am happy that you are interested in this

circuit.
My English is quite poor. Do you mean reset to Zero when turning on?
You may add 1uF to the beginning of C1. It acts like a reset switch on. This will reset the system to zero.

If you test it. There are anythings results. Please share again.
Thanks
Apichet

Reply

Umar

July 1, 2022 at 3:16 pm

I want to make the circuits to have a memory features so that even after turning the circuits off and on the set digits must not change to zero it remain fix unless if I reset it by my self.

Reply

nayaz

June 25, 2023 at 12:44 am

ic 4026 4diigit pcb 10 pis want cost calll 8217891651

Reply

Chayaporn Garaipoom

July 4, 2023 at 11:00 pm

Thank you for your interest in this circuit. but i'm sorry because we don't have PCB 🙂

Reply

Leave a Comment

Name *

Email *

Save my name, email, and website in this browser for the next time I comment.

Post Comment

This site uses Akismet to reduce spam. Learn how your comment data is processed.

About ElecCircuit.com

Electronic Circuits and Mini Projects. We made the ElecCircuit.com, to share our learning experiences on electronics circuits in simple ways.

Search ...

Recent Posts

LM386 Bridged Stereo Amplifier Project — 1-2W Circuits

Simple Police Siren Circuit using Transistors — No Need for ICs

UM66T Melody Generator Circuit – Easy Examples for Beginners

DIY Charge Pump Voltage Doubler Circuit using TDA2822

Learn How Gated SR Latch Works – With Example Circuit

Categories

Power supply

Audio Circuits

Basic Electronics

Controls & Timers

Digitals & MCU

Lightings & LED

Measurement

Oscillator circuits & RF

Related Posts

Learn How Gated SR Latch Works – With Example Circuit

Learn About Two-Transistor SR Latch - How it Works Step-by-Step

How an SR Latch Works – A Step-by-Step Guide

Understanding Input and Output of Digital ICs (TTL & CMOS)

List of Logic Gates and What They Do

Copyright © 2025 · ElecCircuit - All Rights Reserved